ITEM #

MODEL #

NAME #

SIS #

AIA #

NPT Active HP Premium Refrigerated Counter - 290lt, 2-Door, Upstand

111022 (ZH2H3AA) 2-door refrigerated counter 290lt, -2+10°C, with upstand

Short Form Specification

Item No.

AISI 304 stainless steel panels, AISI 430 bottom panel, galvanized back panel. Worktop thickness 50mm, fitted with integrated rear splashback h=100mm. N. 2 full doors. Built-in refrigeration unit. Operating temperature: -2+10°C. R290 gas in refrigeration circuit. Supplied with 1 grid for each door compartment

APPROVAL:

Main Features

- Preservation performances and temperature uniformity within the cell guaranteed at 5-HEAVY DUTY (40°C) working conditions according to EN16825:2016 test protocol.
- Adjustable temperature range from -2 °C to +10 °C to suit meat, fish and dairy storage requirements.
- Raised rear upstand permits unit to be connected up against the wall for better hygiene.
- Large digital white-digit display with humidity selection button (3 preset level), internal temperature display and setting, manual activation of defrost cycle and turbo frost cycle (to rapidly cool warm loads).
- Equipped with forced air circulation system for rapid cooling and temperature distribution within the cell.
- 0mm clearance installation space: tower configuration cooling unit guarantee performance with frontal ventilation only; this unique solution allows installation against the wall or side by side with other appliances, even on the cooling unit side to maximize the use of kitchen space.
- Combination of doors and drawers to suit any configuration needed, with the possibility to change the configuration on site. Right cooling unit available on request.
- Fully removable cooling unit to facilitate maintenance.
- Mounted on stainless steel feet to give 150 mm (-5/+50 mm) clearance for ease of cleaning the floor.
- Frontal and easy access to all components in the cooling unit.
- External bottom panel in stainless steel.
- Fully compliant HACCP digital control: when temperature exceeds critical limits, acoustic and visual alarms are activated. Up to two months of event are kept in memory.
- External back panel in galvanized steel.
- Anti-tilt runners accept GN 1/1 containers.
- Self closing stainless steel doors (< 90°).
- Certified safety CE requirements.
- Prearranged to fit RS485 port to facilitate connection to a remote computer and integrated HACCP systems.
- Hot gas automatic evaporation of defrost water.
- Connectivity ready for real time access to connected appliances from remote and data monitoring (requires optional accessory).
- Tropicalized unit.

NPT Active HP
Premium Refrigerated Counter - 290lt, 2-Door, Upstand

Construction

- 2 compartments with 2 doors.
- Worktop in AISI 304 Stainless steel with a 50 mm profile.
- If needed, working top can be removed for easier handling during installation (in case of narrow doors).
- Anti-drip profile on stainless steel worktop edge.
- Interior base with rounded corners, pressed from a single sheet.
- Ease of cleaning and high hygiene standards thanks to the rounded internal corners, the easily removable runners, grids and air conveyors.
- Internal structure with 15 charging positions (3 cm pitch) available to host GN 1/1 grids, ensuring higher net capacity and a greater storage space.
- Internal and external doors, front and side panels and removable worktop in AISI 304 Stainless steel.
- Built-in refrigeration unit.
- Developed and produced in ISO 9001 and ISO 14001 certified factory.
- Fault code display.

Sustainability

- Top energy efficiency (class A) and granted uniformity even at extreme working conditions (class 5; 40°C and 40% humidity): unbeatable performance, certified by energy test protocol EN16825:2016.
- Fitted with 90 mm thickness of cyclopentane insulation for best insulating performance (thermal conductivity: 0,020 W/m*K) and lowest environmental impact (GWP=3).
- Removable triple-chamber balloon magnetic gasket to improve insulation and reduce energy consumption and ease of cleaning.
- ACTIVE DEFROST - fully automatic defrost starts only when ice is actually building-up in the evaporator and adapts the defrosting duration to guarantee perfect ice removal while optimizing energy efficiency consumption.
- Hydrocarbon refrigerant gas R290 for the lowest environmental impact (GWP=3) - CFC and HCFC free.
- CFC and HCFC free, highly ecological refrigerant type: R290 (ecological gas in foam: cyclopentane). Hydrocarbon refrigerant gas R290 for the lowest environmental impact (GWP=3), to reduce green house and ozone depletion effects.

Included Accessories

- 2 of Kit 1/1 grey rilsan grid and 2 side runners for refrigerated counters PNC 881109

Optional Accessories

2x1/2 drawer kit for refrigerated counters	PNC 881079	❑
3x1/3 drawer kit for refrigerated counters	PNC 881080	❑
1/3 and2/3 bottle drawer kit for refrigerated counters	PNC 881081	❑
1/1GN grey rilsan grid for refrigerated counters	PNC 881107	❑
2 side runners for 1/1 GN refrigerated counters	PNC 881108	❑
Kit 1/1 grey rilsan grid and 2 side runners for refrigerated counters	PNC 881109	❑
1/1 GN plastic container, H=65 mm	PNC 881110	❑
1/1 GN plastic container, H=100 mm	PNC 881111	❑
1/1 GN plastic container, H=150 mm	PNC 881112	❑
Kit 4 wheels, H=100 mm (2 with brakes) for refrigerated counters	PNC 881191	❑
Kit 4 wheels, H=150 mm (2 with brakes) for 2&3 compartment refrigerated counters	PNC 881193	❑
Lock for refrigerator/freezer counters with 2 compartments - h700mm	PNC 881242	❑

The company reserves the right to make modifications to the products without prior notice. All information correct at time of printing.

2024.10.07

NPT Active HP
Premium Refrigerated Counter - 290lt, 2-Door, Upstand

Front

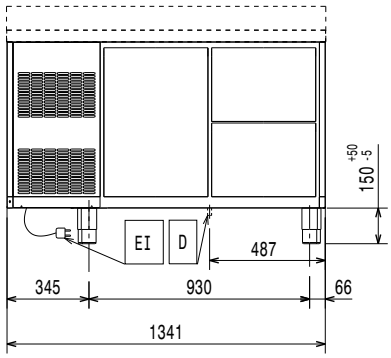

Side

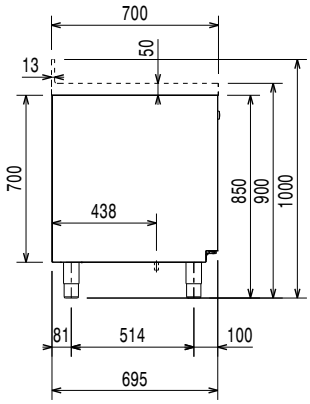

EI = Electrical inlet (power)

Top

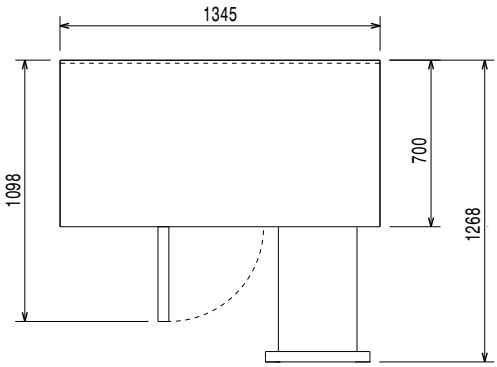

Electric

Supply voltage:	
111022 (ZH2H3AA)	220-240 V/1 ph/50 Hz
Electrical power max.:	0.25 kW
Defrost Power:	0.22 kW
Plug type:	CE-SCHUKO

Key Information:

Gross capacity:	290 lt
Net Volume:	198 lt
Door hinges:	1 Left+1 Right
External dimensions, Width:	1345 mm
External dimensions, Depth:	700 mm
External dimensions, Height:	1000 mm
Internal Dimensions, Width:	798 mm
Internal Dimensions, Depth:	560 mm
Internal Dimensions, Height:	550 mm
Net weight:	112 kg
Shipping volume:	1.17 m³
Depth with doors open:	1110 mm
Height adjustment:	-5/50 mm

Refrigeration Data

Control type:	Digital
Compressor power:	1/4 hp
Refrigeration power at evaporation temperature:	-10 °C
Min/Max internal humidity:	40/85
Operating temperature min.:	-2 °C
Operating temperature max.:	10 °C
Operating mode:	Ventilated

Sustainability

Current consumption:	1.8 Amps
Energy Class (EU Reg. 2015/1094):	A
Yearly and daily energy consumption (EU Reg. 2015/1094):	456kWh/year - 1kWh/24h
Climate class (EU Reg. 2015/1094):	Heavy Duty (5)
Energy Efficiency Index-EEI (EU Reg. 2015/1094):	19,86
Refrigerant type:	R290
GWP Index:	3
Refrigeration power:	320 W
Refrigerant weight:	70 g

The company reserves the right to make modifications to the products without prior notice. All information correct at time of printing.

2024.10.07

NPT Active HP
Premium Refrigerated Counter - 290lt, 2-Door, Upstand

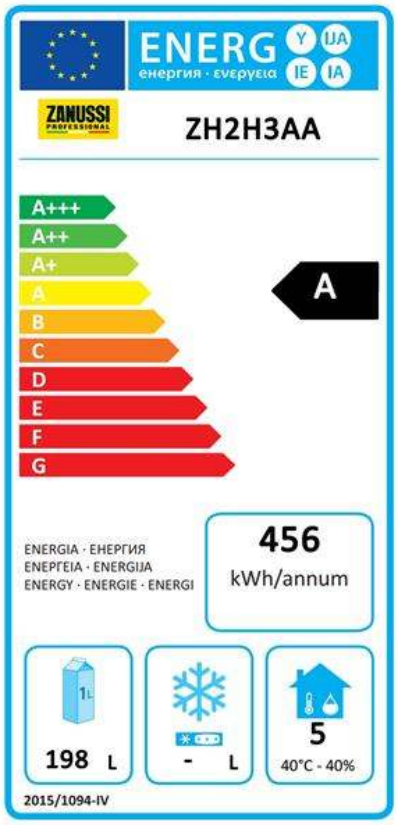

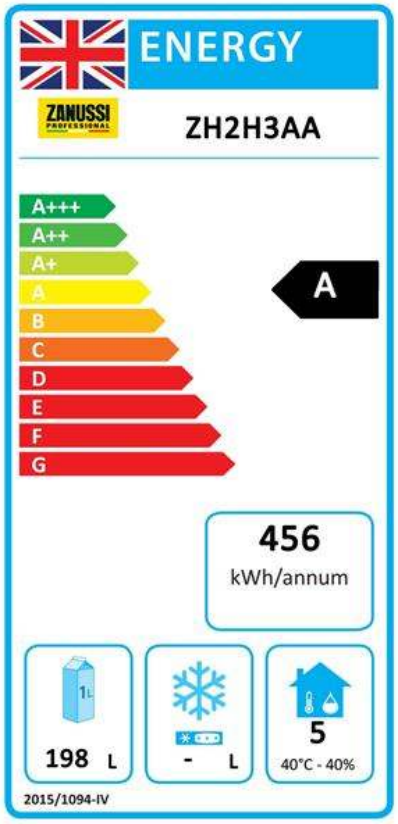

EU energy labelling from 1st July 2016

The European energy labelling scheme for professional refrigerators and freezers is based on requirements setting Minimum Energy Performance standards for commercial refrigeration cabinets sold within the EU. These requirements are designed to drive energy efficiency and environmentally friendly approach for professionals. The European energy labelling scheme will apply to all manufacturers and importers who sell and market products within the EU and it is mandatory across Europe. Important: all products which consume energy above the minimum level will not be able to be sold within the EU from 1 July 2016.

SI 2020 No. 1528.

Important: all products which consume energy above the minimum level will not be able to be sold within the EU from 1 July 2016.

The company reserves the right to make modifications to the products without prior notice. All information correct at time of printing.